Verilog code for Decoder

Decoder is one of the main combinational components in digital circuits. Decoders are mainly used in memory address decoding and data demultiplexing.

In this Verilog project, Verilog code for decoder is presented. The decoder is used for memory address decoding.

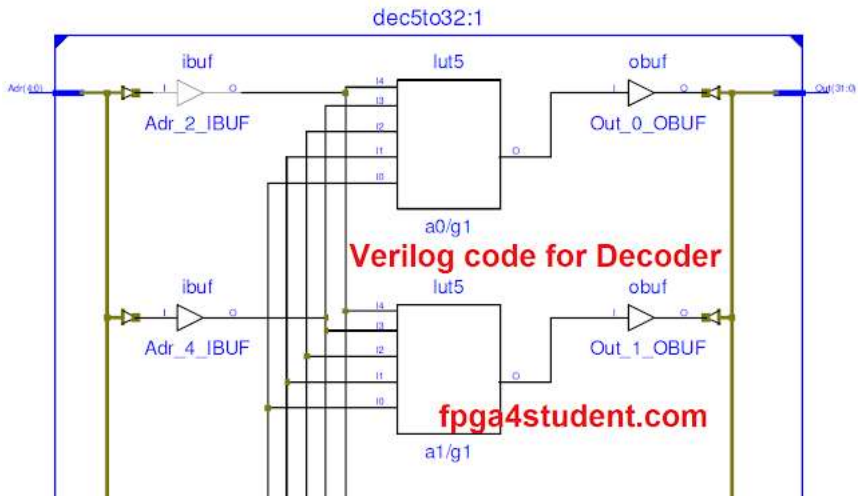

The decoder as shown in the figure above decodes the 5-bit address input and outputs a 32-bit signal to select the address being written in the memory. To design the decoder, 32 5-input AND gates are used.

Verilog code for 5 to 32 Decoder:

```
// fpga4student.com: FPGA projects, Verilog projects, VHDL projects
// Verilog code for decoder
// 5-input AND gate
module AND_5_input(g,a,b,c,d,e);
  output g;
  input a,b,c,d,e;
  and #(50) and1(f1,a,b,c,d),
            and2(g,f1,e);
endmodule
// fpga4student.com: FPGA projects, Verilog projects, VHDL projects
// Verilog code for decoder
// Decoder top level Verilog code using 5-input AND gates
module dec5to32(Out,Adr);
input [4:0] Adr; // Adr=Address of register
output [31:0] Out;
not #(50) Inv4(Nota, Adr[4]);
not #(50) Inv3(Notb, Adr[3]);
not #(50) Inv2(Notc, Adr[2]);
not #(50) Inv1(Notd, Adr[1]);
not #(50) Inv0(Note, Adr[0]);

AND_5_input a0(Out[0],  Nota,Notb,Notc,Notd,Note); // 00000
AND_5_input a1(Out[1],  Nota,Notb,Notc,Notd,Adr[0]); // 00001
AND_5_input a2(Out[2],  Nota,Notb,Notc,Adr[1],Note); //00010
AND_5_input a3(Out[3],  Nota,Notb,Notc,Adr[1],Adr[0]);
AND_5_input a4(Out[4],  Nota,Notb,Adr[2],Notd,Note);
AND_5_input a5(Out[5],  Nota,Notb,Adr[2],Notd,Adr[0]);
AND_5_input a6(Out[6],  Nota,Notb,Adr[2],Adr[1],Note);
AND_5_input a7(Out[7],  Nota,Notb,Adr[2],Adr[1],Adr[0]);
AND_5_input a8(Out[8],    Nota,Adr[3],Notc,Notd,Note);
AND_5_input a9(Out[9],    Nota,Adr[3],Notc,Notd,Adr[0]);
```

```
AND_5_input a10(Out[10],  Nota,Adr[3],Notc,Adr[1],Note);
AND_5_input a11(Out[11],  Nota,Adr[3],Notc,Adr[1],Adr[0]);
AND_5_input a12(Out[12],  Nota,Adr[3],Adr[2],Notd,Note);
AND_5_input a13(Out[13],  Nota,Adr[3],Adr[2],Notd,Adr[0]);
AND_5_input a14(Out[14],  Nota,Adr[3],Adr[2],Adr[1],Note);
AND_5_input a15(Out[15],  Nota,Adr[3],Adr[2],Adr[1],Adr[0]);
AND_5_input a16(Out[16],  Adr[4],Notb,Notc,Notd,Note);
AND_5_input a17(Out[17],  Adr[4],Notb,Notc,Notd,Adr[0]);
AND_5_input a18(Out[18],  Adr[4],Notb,Notc,Adr[1],Note);
AND_5_input a19(Out[19],  Adr[4],Notb,Notc,Adr[1],Adr[0]);
AND_5_input a20(Out[20],  Adr[4],Notb,Adr[2],Notd,Note);
AND_5_input a21(Out[21],  Adr[4],Notb,Adr[2],Notd,Adr[0]);
AND_5_input a22(Out[22],  Adr[4],Notb,Adr[2],Adr[1],Note);
AND_5_input a23(Out[23],  Adr[4],Notb,Adr[2],Adr[1],Adr[0]);
AND_5_input a24(Out[24],  Adr[4],Adr[3],Notc,Notd,Note);
AND_5_input a25(Out[25],  Adr[4],Adr[3],Notc,Notd,Adr[0]);
AND_5_input a26(Out[26],  Adr[4],Adr[3],Notc,Adr[1],Note);
AND_5_input a27(Out[27],  Adr[4],Adr[3],Notc,Adr[1],Adr[0]);
AND_5_input a28(Out[28],  Adr[4],Adr[3],Adr[2],Notd,Note);
AND_5_input a29(Out[29],  Adr[4],Adr[3],Adr[2],Notd,Adr[0]);
AND_5_input a30(Out[30],  Adr[4],Adr[3],Adr[2],Adr[1],Note);
AND_5_input a31(Out[31],  Adr[4],Adr[3],Adr[2],Adr[1],Adr[0]); // 11111
endmodule
```

The decoder is implemented and successfully verified in the Verilog project of 32-bit MIPS processor here. The decoder is used in the register file for address decoding.

Recommended Verilog projects:

1. **What is an FPGA? How Verilog works on FPGA**
2. Verilog code for FIFO memory
3. Verilog code for 16-bit single-cycle MIPS processor
4. Programmable Digital Delay Timer in Verilog HDL
5. Verilog code for basic logic components in digital circuits
6. Verilog code for 32-bit Unsigned Divider
7. Verilog code for Fixed-Point Matrix Multiplication
8. Plate License Recognition in Verilog HDL
9. Verilog code for Carry-Look-Ahead Multiplier
10. Verilog code for a Microcontroller
11. Verilog code for 4x4 Multiplier
12. Verilog code for Car Parking System
13. Image processing on FPGA using Verilog HDL
14. How to load a text file into FPGA using Verilog HDL
15. Verilog code for Traffic Light Controller
16. Verilog code for Alarm Clock on FPGA
17. Verilog code for comparator design
18. Verilog code for D Flip Flop
19. Verilog code for Full Adder
20. Verilog code for counter with testbench
21. Verilog code for 16-bit RISC Processor
22. Verilog code for button debouncing on FPGA
23. How to write Verilog Testbench for bidirectional/ inout ports
24. Tic Tac Toe Game in Verilog and LogiSim
25. 32-bit 5-stage Pipelined MIPS Processor in Verilog (Part-1)
26. 32-bit 5-stage Pipelined MIPS Processor in Verilog (Part-2)
27. 32-bit 5-stage Pipelined MIPS Processor in Verilog (Part-3)
28. Verilog code for Decoder
29. Verilog code for Multiplexers
30. N-bit Adder Design in Verilog
31. Verilog vs VHDL: Explain by Examples
32. Verilog code for Clock divider on FPGA

33. How to generate a clock enable signal in Verilog
34. Verilog code for PWM Generator
35. Verilog coding vs Software Programming
36. Verilog code for Moore FSM Sequence Detector
37. Verilog code for 7-segment display controller on Basys 3 FPGA

DMCA PROTECTED

Copyright © 2016-2020 FPGA4student.com All Rights Reserved.